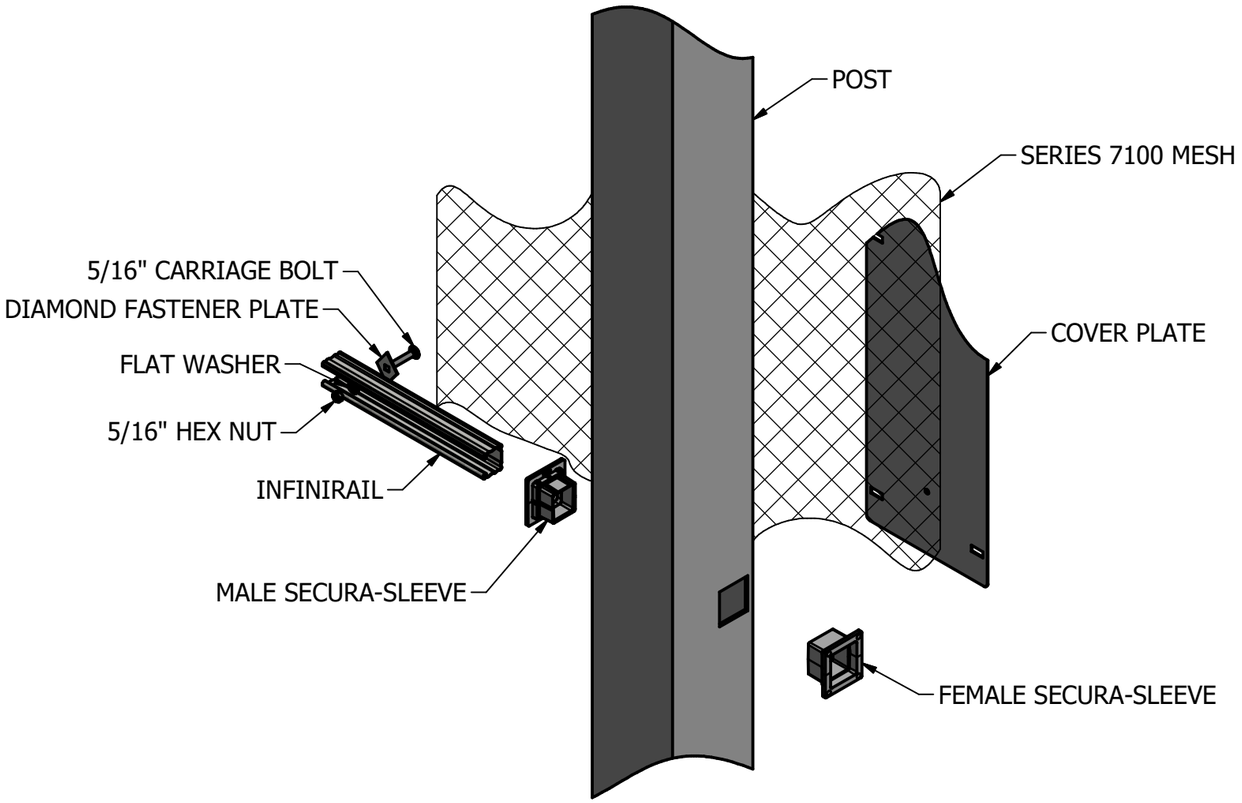

EXPLODED VIEW

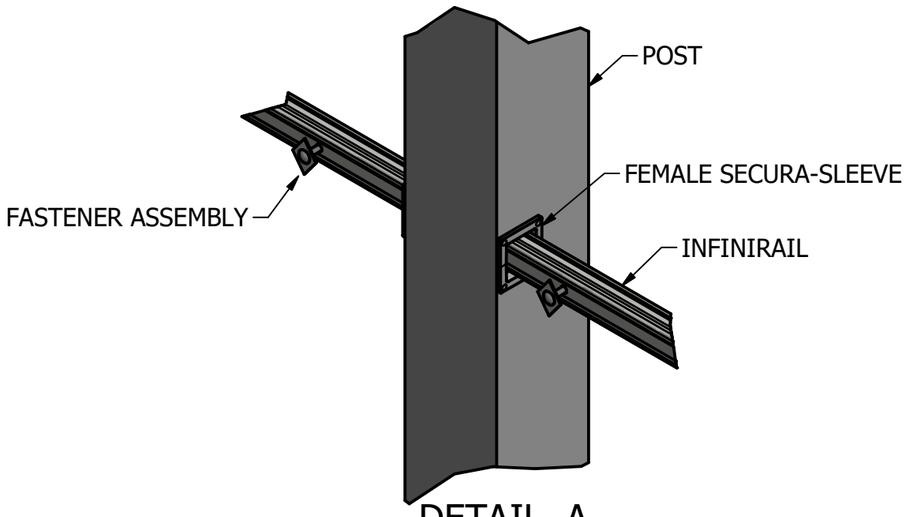

DETAIL A
ASSEMBLED VIEW

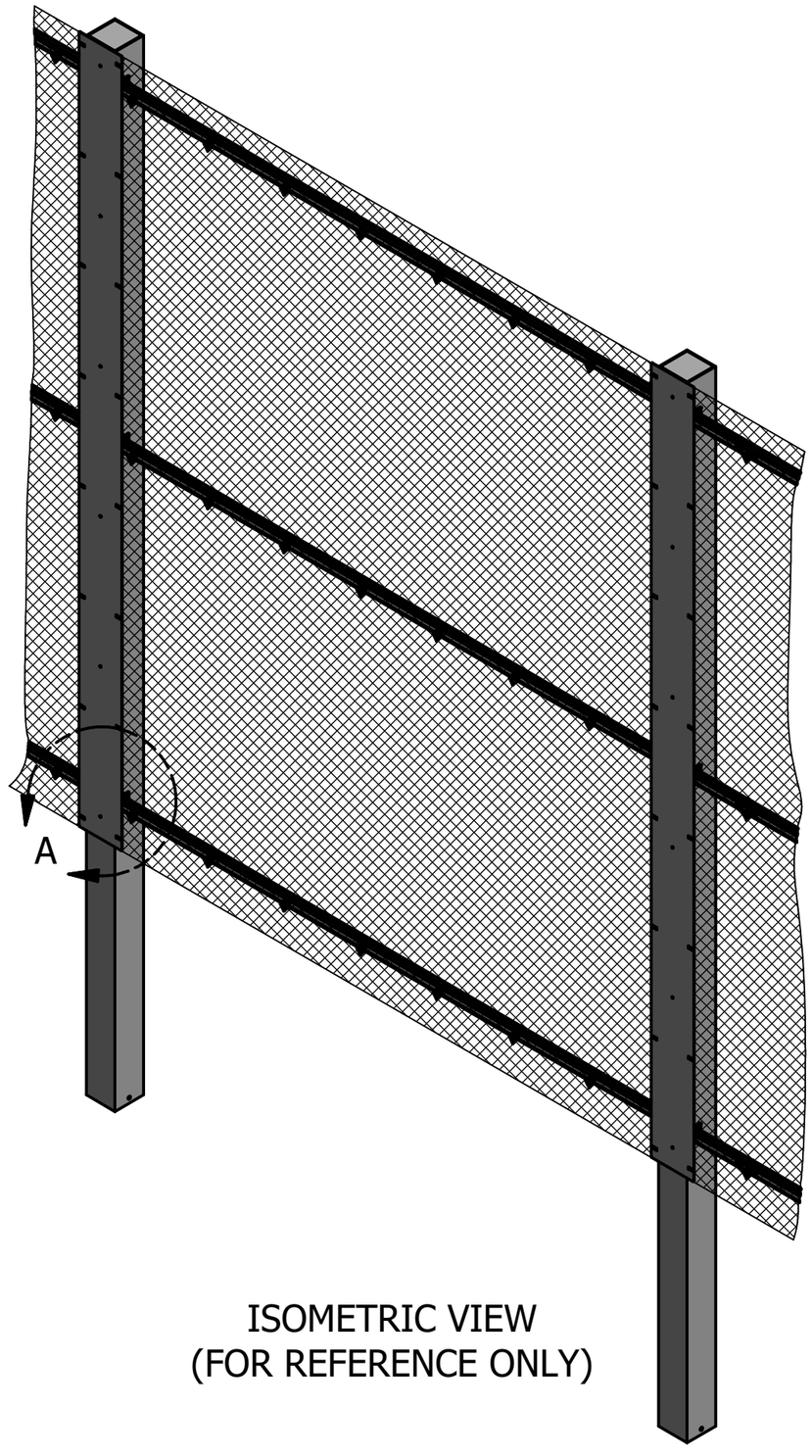

ISOMETRIC VIEW
(FOR REFERENCE ONLY)

THIS DRAWING IS THE PROPERTY OF AMICO, INC., AND IS CONFIDENTIAL AND MUST NOT BE MADE PUBLIC OR COPIED, AND IS SUBJECT TO RETURN ON DEMAND. ALL RIGHTS OF INVENTION OR DESIGN ARE RESERVED.

AMICO SECURITY

REV	DATE	DESCRIPTION	BY
0	4/5/2019	FOR APPROVAL	CJC

AMIGUARD 7100 12FT TALL 3
RAIL 10FT OC ISOMETRIC

MATERIAL SPECIFICATIONS

A36 STEEL: ALL PLATE ANGLE & CHANNEL
A500 GRADE B: ALL TUBE STEEL
COMMERCIAL GALV: ALL GA WIRE

FINISH

PROJECT			
CUSTOMER			
SO#			
QUOTE#			
DATE	DRAFTER	REVIEWER	
4/5/2019	C. COUVILLION		

SHEET NO.
A4